PARTS ILLUSTRATION
SINGLE LEVER HANDLE KITCHEN FAUCET

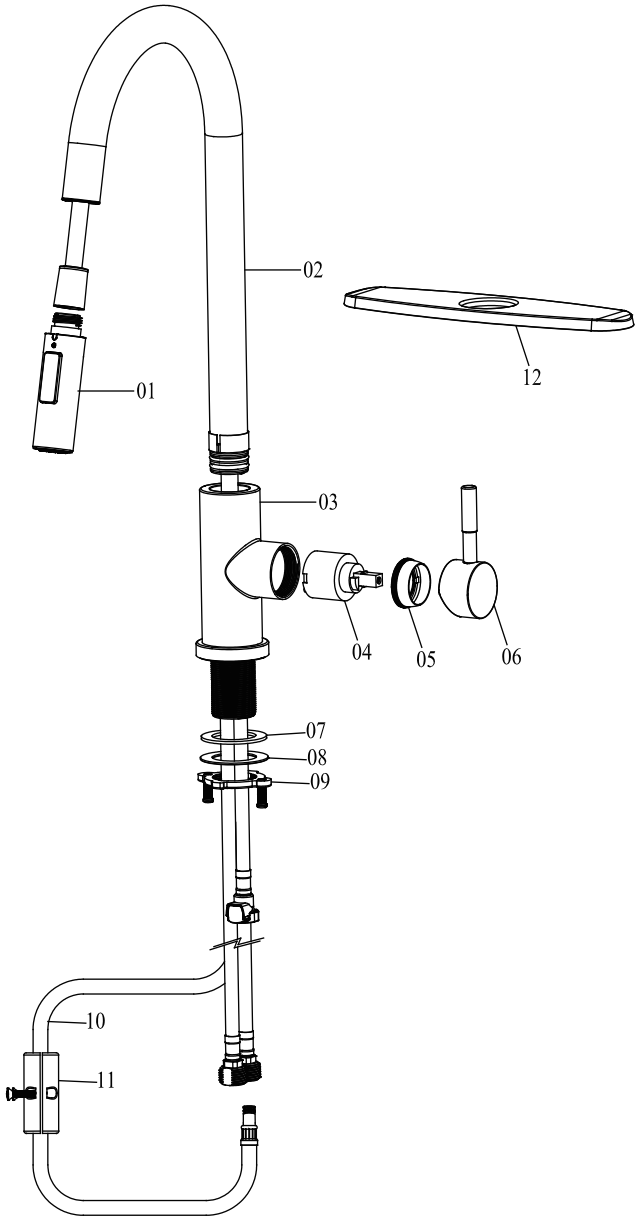

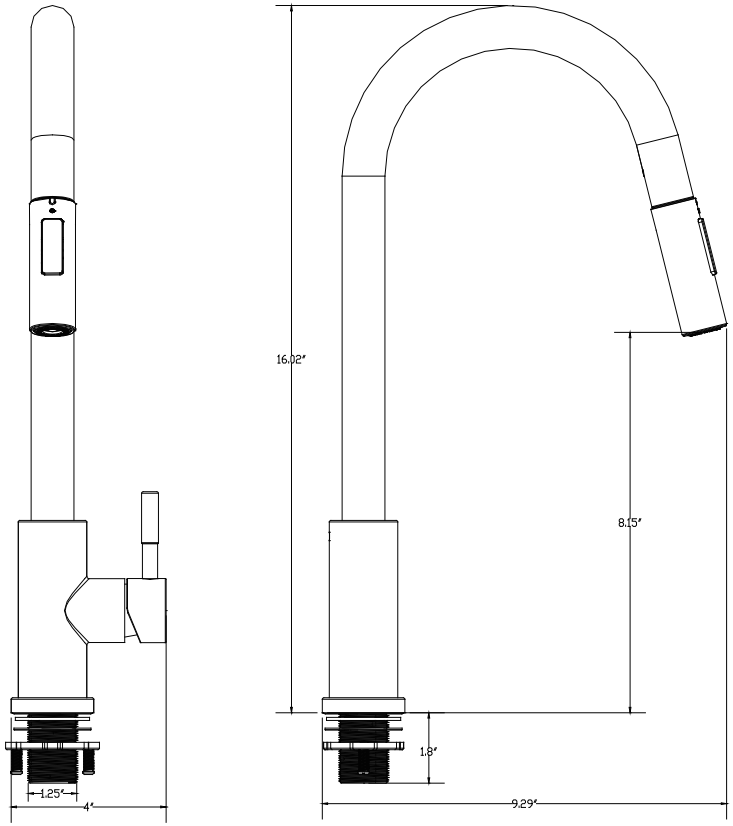

PARTS LIST

Key No.	Part No.	Description
1	09A107	Shwoer Head
2	03S024	Spout
3	01S058	Body
4	02I006	Ceramic Cartridge
5	02S019	Nut
6	07S013	Handle & Screw
7	06E069	Washer
8	03S074	Washer
9	03S073	Mounting Nut
10	09V059	Shower Hose
11	09I050	Weight
12	04S006	Deck Plate

INSTALLATION INSTRUCTIONS
TO INSTALL SINGLE HANDLE PULL-DOWN KITCHEN FAUCETS

1. Turn off water at the supply valve under the sink or at the main water supply,disconnect the supply line,and remove old faucet.

   Clean and dry surface area where new faucet will be mounted.

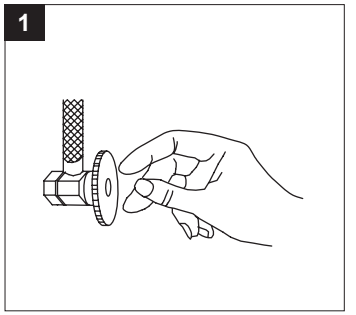

2. Position the faucet (A) on the sink surface (2.1).

   Hand tighten the mounting nuts (B) to the faucet (A) tailpieces on the underside of the sink (2.1).

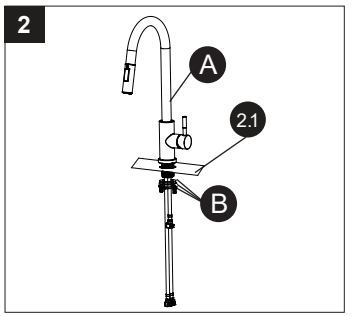

3. Plug the quick connector cover (3.3) into the faucet body adapter (3.2). Push all the way to the top. Pull down the hose (3.1) to lock quick connector. Check connection of the quick connector by pulling down the hose slightly.

   Pull spray head in and out to check for smooth operation.

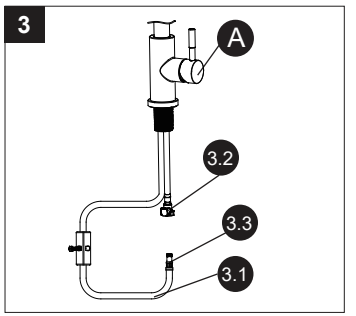

4. **Connect the Water Supply Lines** using a flexible braided supply line (4.1) (not included), connect the end with 1/2 in. female IPS to the tailpiece (4.2) of the faucet. Hand tighten. Do not overtighten. Install the other end of the supply line (4.1) to the shut-off valve or supply tube.
   NOTE: Consumer should follow the directions on the supply line and if you have any questions about proper installation of the supply line, consult the manufacturer of the supply line.
   NOTE: Do not use plumbers tape on connections, this will void the warranty. If the washer of the supply line is damaged, change to new one before install to the faucet.
   DO NOT INSTALL SUPPLY LINE WITHOUT INSPECTION. Leakage will come from the supply line and possibly cause water damage to your house.

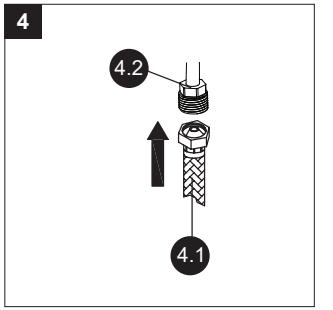
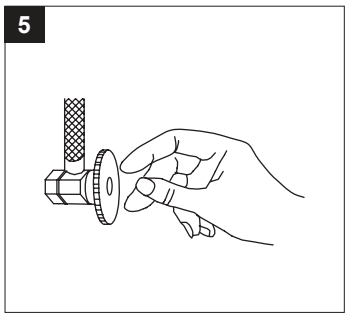
5. Turn water supply or shut-off valve back on and check for leaks.If leaks occur, tighten nuts slightly.